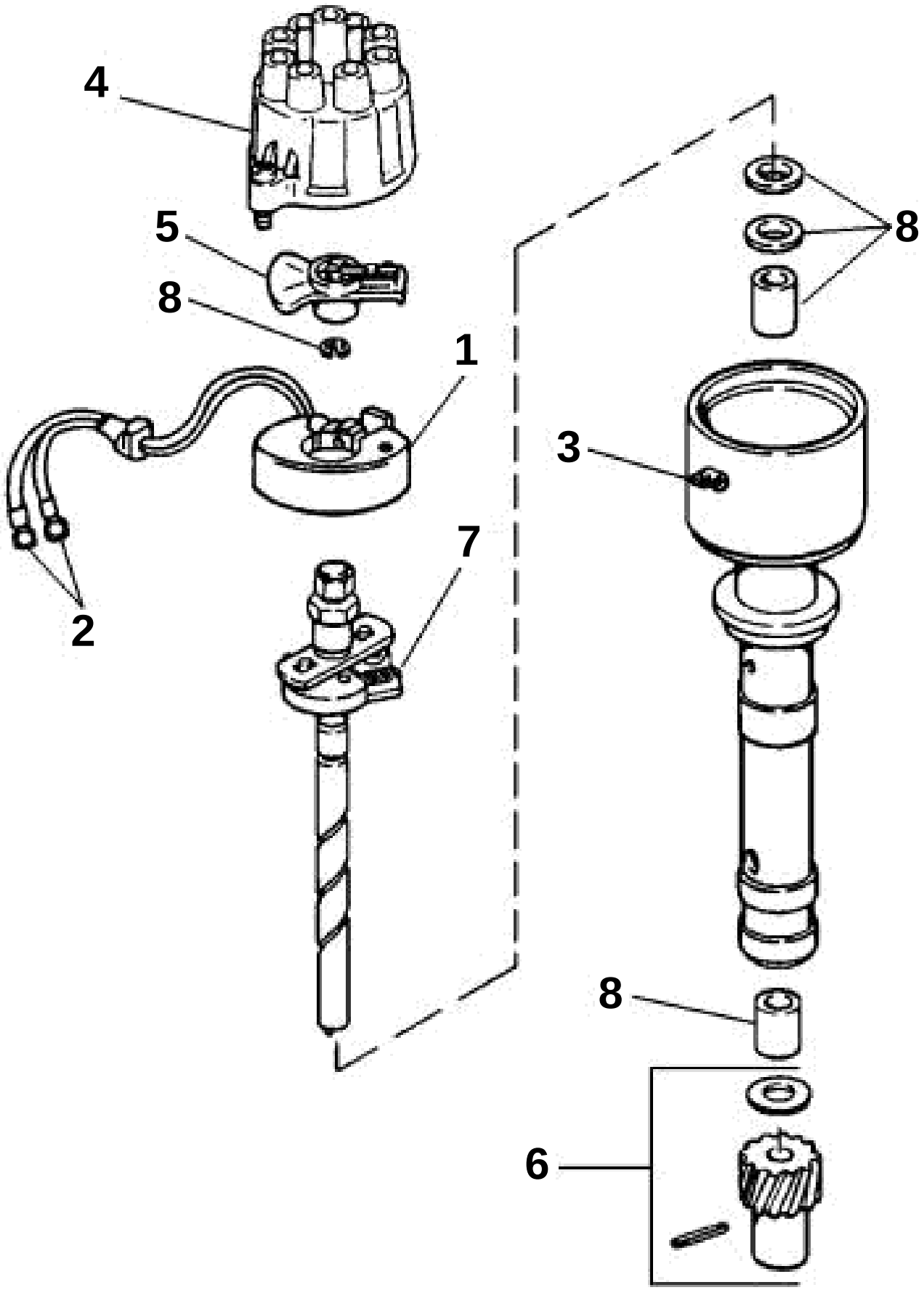
4
5
8
1
2
7
3
8
8
6

DISTRIBUTOR, GL / GS

REF	PART NO.	QTY	DESCRIPTION	NOTES
	3854043	1	Distributor	Not shown
1	3854077	1	· Sender	
2	3852035	1	· · Cable terminal, Coil	
3	3853812	1	· Bracket	
4	3853815	1	· Cover	
5	3853801	1	· Rotor	
6	3853888	1	· Gear set, Distributor	
7	3853858	1	· Spring kit	
8	3853795	1	· Bearing	